Seals-Shop.com
Quality. Availability. Speed.

TECHNICAL INFORMATION

Piston Seals | Turcon® Glyd Ring®

Description

Successfully used for decades, the Turcon® Glyd Ring® is a very effective and reliable low friction seal. It is particularly suitable as a piston seal in both high and low pressure systems.
The double acting Turcon® Glyd Ring® is a combination of a Turcon® based slipper seal and an energising O-Ring. It is produced with an interference fit which together with the squeeze of the O-Ring ensures a good sealing effect even at low pressure. At higher system pressures, the O-Ring is energised by the fluid, pushing the Turcon® Glyd Ring® against the sealing face with increased force.
To assure rapid energizing of the seal takes place at sudden changes of pressure and direction of motion, radial notches are machined on both sides of the seal for all diameters greater than 20 mm.

Advantages

- No stick-slip effect when starting for smooth operation
- Minimum static and dynamic friction coefficient for a minimum energy loss and operating temperature
- Suitable for non-lubricating fluids depending on seal material for optimum design flexibility
- High wear resistance ensures long service life
- Installation grooves acc. to ISO 7425/1
- No adhesive effect to the mating surface during long period of inactivity or storage
- Suitable for most hydraulic fluids in relation with most modern hardware materials and surface finish depending on material selected

Technical Data

Pressure	:	Reciprocating up to approximately 50 MPa
Speed	:	Reciprocating up to approximately 15 m/s
Temperature	:	-30 °C to +200 °C (depending on the material)
Media	:	Mineral oil based hydraulic fluids, flame retardant hydraulic fluids, environmentally safe hydraulic fluids (bio-oils), phosphate ester, water and others, depending on the seal and O-Ring material compatibility
Clearance	:	The maximum permissible radial clearance S_{max} is shown in the following installation dimension table as a function of the operating pressure and functional diameter.

Seals-Shop.com
Quality. Availability. Speed.

TECHNICAL INFORMATION

Piston Seals | Turcon® Glyd Ring®

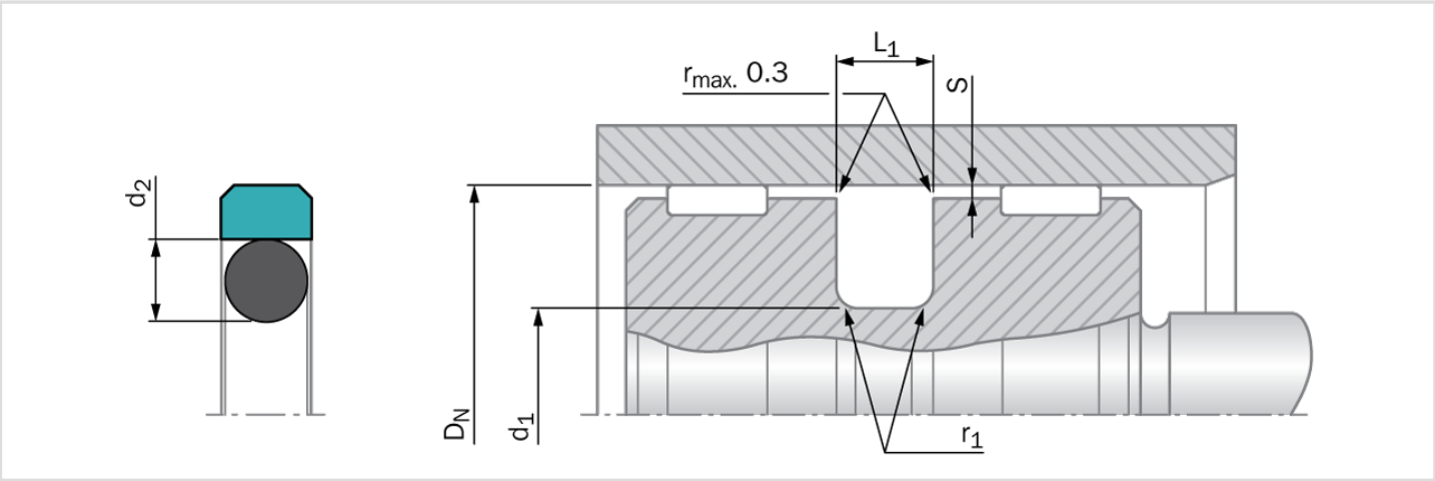

Installation dimensions - Standard recommendations

Bore Diameter D_N H9			Groove Diameter	Groove Width	Radius	Radial Clearance $S_{max.}$*			O-Ring Cross Section
Series No. PG 44 Standard Application	Series No. PG 46 Light Application	Series No. PG 42 Heavy Duty Application	d_1 h9	L_1 ±0.2	$r_{1\,max}$	10 MPa	20 MPa	40 MPa	d_2
8 - 14.9	15 - 39.9	-	D_N - 4.9	2.2	0.4	0.30	0.20	0.15	1.78
15 - 39.9	40 - 79.9	8 - 14.9	D_N - 7.5	3.2	0.6	0.40	0.25	0.15	2.62
40 - 79.9	80 - 132.9	15 - 39.9	D_N - 11.0	4.2	1.0	0.40	0.25	0.20	3.53
80 - 132.9	133 - 329.9	40 - 79.9	D_N - 15.5	6.3	1.3	0.50	0.30	0.20	5.33
133 - 329.9	330 - 669.9	80 - 132.9	D_N - 21.0	8.1	1.8	0.60	0.35	0.25	7.00
330 - 669.9	670 - 999.9	133 - 329.9	D_N - 24.5	8.1	1.8	0.60	0.35	0.25	7.00
670 - 999.9	1000 - 1200	330 - 669.9	D_N - 28.0	9.5	2.5	0.70	0.50	0.30	8.40
1000 - 2700**	-	670 - 999.9	D_N - 38.0	13.8	3.0	1.00	0.70	0.60	12.00

* At pressures > 40 MPa use diameter tolerance H8/f8 (bore/piston) in area of the seal.
Slydring® / Wear Rings are not applicable at very small radical clearance S.
** O-Rings with 12 mm cross section are delivered as special profile ring.

Important Note

Installation suggestions, material recommendations, parameters and further data provided are always subject to the particular field of use and the application in which the seal is intended to be used, in particular the interaction of the seal with other components of the application. Therefore they neither constitute an agreement on the legal and factual nature nor a guarantee of quality. Technical changes and errors remain reserved.